

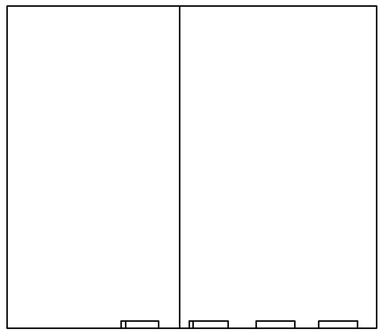

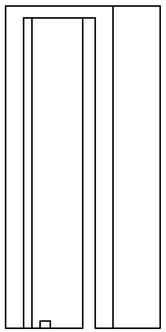

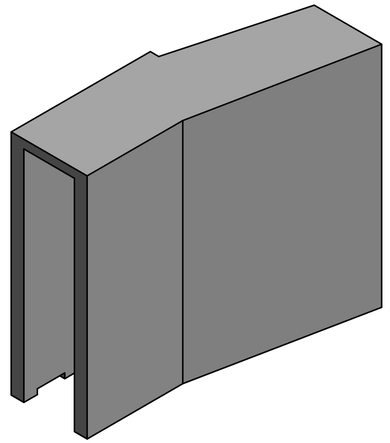

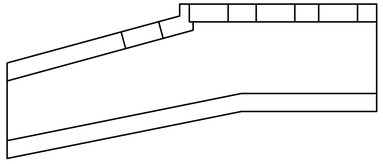

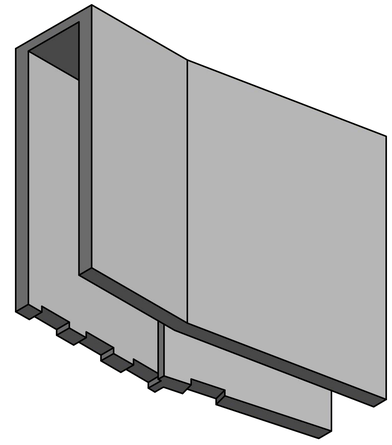

isolating material, plastic, e.g. 3d printed, white color or transparent

DRAWN zechnerf	29.03.2019	
CHECKED		TITLE
QA		
MFG		
APPROVED		SIZE D / DWG NO / REV
		SCALE 2:1 / SHEET 1 OF 1